Numerical processing of financial data
APM 50442 EP
Part 2: sequential stock data in higher dimension

Matthieu Garcin

École Polytechnique

2025-2026

1 Sequential stock data in one dimension

2 Sequential stock data in higher dimension
- Linear dependence between several assets
- Cross-correlation at one scale
- Multiresolution correlation ($\star$)

3 From sequential data to portfolio selection

4 Market microstructure

1 Sequential stock data in one dimension

2 Sequential stock data in higher dimension
- Linear dependence between several assets
- Cross-correlation at one scale
- Multiresolution correlation ($\star$)

3 From sequential data to portfolio selection

4 Market microstructure

Correlation

Definition

For a vector of random (square integrable) price-returns of d assets, $X = (r^1_{s_1,t_1}, ..., r^d_{s_d,t_d})'$, the **covariance** matrix is:

$$\mathbb{V}\mathrm{ar}(X) = \mathbb{E}[(X - \mathbb{E}[X])(X - \mathbb{E}[X])'] = \begin{pmatrix} \mathbb{V}\mathrm{ar}(r^1_{s_1,t_1}) & \mathrm{Cov}(r^1_{s_1,t_1}, r^2_{s_2,t_2}) & \cdots & \mathrm{Cov}(r^1_{s_1,t_1}, r^d_{s_d,t_d}) \\ \mathrm{Cov}(r^2_{s_2,t_2}, r^1_{s_1,t_1}) & \ddots & \cdots & \vdots \\ \vdots & \vdots & \ddots & \vdots \\ \mathrm{Cov}(r^d_{s_d,t_d}, r^1_{s_1,t_1}) & \cdots & \cdots & \mathbb{V}\mathrm{ar}(r^d_{s_d,t_d}) \end{pmatrix}.$$

- The covariance matrix Σ is: a square matrix, symmetric, and positive (for all vector A, $\mathbb{V}\mathrm{ar}(A^t X) = A^t \Sigma A \geq 0$).
- Most useful case: synchronized covariance matrix: $\forall i, j \in [\![1, d]\!]$, $s_i = s_j$ and $t_i = t_j$.
- With a stationarity assumption, $\mathrm{Cov}(r^i_{s,s+\tau}, r^j_{s,s+\tau})$ is estimated by

$$\frac{1}{n}\sum_{k=1}^{n}(r^i_{s_k,s_k+\tau} - \langle r^i_{s_k,s_k+\tau}\rangle)(r^j_{s_k,s_k+\tau} - \langle r^j_{s_k,s_k+\tau}\rangle).$$

The beta (1/2)

The performance of an asset i is decomposed in an idiosyncratic part (the alpha) and a systematic part (the beta):

$$r^i_{t,t+\tau} = \alpha_i + \beta_i r^{\text{market}}_{t,t+\tau} + \varepsilon_t,$$

with:

- $r^{\text{market}}_{t,t+\tau}$ the price return of the market between t and $t+\tau$, the market being an index or a selection of stocks (the resulting beta will depend on this selection),
- ε_t a centred independent noise.

Assuming a centred market return, we have

$$\beta_i = \frac{\text{Cov}(r^i_{t,t+\tau}, r^{\text{market}}_{t,t+\tau})}{\mathbb{V}\text{ar}(r^{\text{market}}_{t,t+\tau})},$$

which can be estimated by empirical moments, provided the time series are stationary.
$\rightsquigarrow$ What is the average beta in the market?

The beta (2/2)

Similar approach in the CAPM (capital asst pricing model):

$$\mathbb{E}[r^i_{t,t+\tau}] = r^f_{t,t+\tau} + \beta_i \left(\mathbb{E}[r^{\text{market}}_{t,t+\tau}] - r^f_{t,t+\tau} \right),$$

with:

- $r^f_{t,t+\tau}$ the risk-free rate,
- $\mathbb{E}[r^i_{t,t+\tau} - r^f_{t,t+\tau}]$ (respectively $\mathbb{E}[r^{\text{market}}_{t,t+\tau} - r^f_{t,t+\tau}]$) the individual (resp. market) risk premium.

$\rightsquigarrow$ Python exercise, Question 1.

1 Sequential stock data in one dimension

2 Sequential stock data in higher dimension
- Linear dependence between several assets
- Cross-correlation at one scale
- Multiresolution correlation ($\star$)

3 From sequential data to portfolio selection

4 Market microstructure

Cross-correlation

Definition

For two distinct vectors of (square integrable) random price-returns of two assets, $X = (r^1_{s_1,t_1}, ..., r^1_{s_m,t_m})'$ and $Y = (r^2_{s_1,t_1}, ..., r^2_{s_n,t_n})'$, the **cross-covariance** matrix is:

$$\mathbb{V}\mathrm{ar}(X) = \mathbb{E}[(X - \mathbb{E}[X])(Y - \mathbb{E}[Y])'] = \begin{pmatrix} \mathrm{Cov}(r^1_{s_1,t_1}, r^2_{s_1,t_1}) & \mathrm{Cov}(r^1_{s_1,t_1}, r^2_{s_2,t_2}) & \cdots & \mathrm{Cov}(r^1_{s_1,t_1}, r^2_{s_n,t_n}) \\ \mathrm{Cov}(r^1_{s_2,t_2}, r^2_{s_1,t_1}) & \ddots & \cdots & \vdots \\ \vdots & \vdots & \ddots & \vdots \\ \mathrm{Cov}(r^1_{s_m,t_m}, r^2_{s_1,t_1}) & \cdots & \cdots & \mathrm{Cov}(r^1_{s_m,t_m}, r^2_{s_n,t_n}) \end{pmatrix}.$$

- The cross-covariance matrix R_{XY} is an $m \times n$ matrix.
- The more useful quantity regarding the interpretation is the cross-correlation: $\mathrm{Cov}(r^1_{s_i,t_i}, r^2_{s_j,t_j}) / \sqrt{\mathbb{V}\mathrm{ar}(r^1_{s_i,t_i})\mathbb{V}\mathrm{ar}(r^2_{s_j,t_j})}$.
- With a stationarity assumption, estimation with empirical cross-moments and then a vector of cross-correlation is enough for describing the full matrix. Useful for detecting **lead-lag effect** (see next page).

Lead-lag relationship (1/4)

Definition

A **lead-lag** relationship appears when one variable (the leader) is significantly cross-correlated with another variable (the lagger) at later times.

Example of usual lead-lag effects

- Large-capitalization stock returns $\Longrightarrow$ small-capitalization stock returns.
- Stock index returns $\Longrightarrow$ single stock returns.
- Commodities $\Longrightarrow$ stocks of firms depending on them.
- Developed markets $\Longrightarrow$ emerging ones.
- Interest rates (Fed, ECB...) $\Longrightarrow$ bond market $\Longrightarrow$ stock market.

One can use lead-lag relationship to build statistical arbitrage strategies.

Lead-lag relationship (2/4)

The ARDL model

In the **autoregressive distributed-lag** (ARDL) model, the dependent variable y_t is related to the current and lagged explanatory variables x_t:

- finite distributed lag ($p + m$ parameters), ARDL(p, m):

$$y_t = c + \sum_{i=1}^{p} \kappa_i y_{t-i} + \sum_{i=0}^{m} \phi_i x_{t-i} + \varepsilon_t,$$

- infinite distributed lag (structured lag functions, parameterized by $(\theta, \theta') \in \mathbb{R}^d \times \mathbb{R}^{d'}$, otherwise infinite dimension):

$$y_t = c + \sum_{i=1}^{\infty} \kappa_{\theta'}(i) y_{t-i} + \sum_{i=0}^{\infty} \phi_\theta(i) x_{t-i} + \varepsilon_t.$$

Estimation for n observations, finite case: ordinary least squares if $n \gg m$, but possibly strong **multicollinearity** ($\longrightarrow$ then parameterized lags to be preferred).
$\rightsquigarrow$ How to detect multicollinearity?

Lead-lag relationship – Parametric lag models (3/4)

Linear (in the parameters) lag models:

- Almon lag model, appropriate only for finite distributed lags:

$$\phi_{(r,\theta_0,\ldots,\theta_r)}(i) = \sum_{j=0}^{r} \theta_j i^j.$$

- Polynomial inverse lag model:

$$\phi_{(r,\theta_2,\ldots,\theta_r)}(i) = \sum_{j=2}^{r} \frac{\theta_j}{(i+1)^j}.$$

- Geometric combination lag model:

$$\phi_{(r,\theta_2,\ldots,\theta_r)}(i) = \sum_{j=2}^{r} \frac{\theta_j}{j^i}.$$

$\rightsquigarrow$ How to estimate the parameters of these lag models?

Lead-lag relationship – Parametric lag models (4/4)

Nonlinear (in the parameters) lag models:

- (Second-order) exponential Almon lag model:

$$\phi_{(\theta_1,\theta_2,\theta_3)}(i) = \theta_1 e^{\theta_2 i + \theta_3 i^2}.$$

- Beta lag model, <u>appropriate only for m-finite distributed lags</u>:

$$\phi_{(\theta_1,\theta_2,\theta_3)}(i) = \theta_1 \left[\left(\frac{i}{m}\right)^{\theta_2 - 1} \left(1 - \frac{i}{m}\right)^{\theta_3 - 1} \right].$$

$\rightsquigarrow$ How different is the estimation of the parameters of these nonlinear lag models?
$\rightsquigarrow$ Python exercise, Question 2.

1 Sequential stock data in one dimension

2 Sequential stock data in higher dimension
- Linear dependence between several assets
- Cross-correlation at one scale
- Multiresolution correlation ($\star$)

3 From sequential data to portfolio selection

4 Market microstructure

Decomposing a time series at various time scales

We project a time series $z(t)$ in a space of simple time series $f_{\mathbf{u}}(t)$ (identified by $\mathbf{u} \in \Theta \subset \mathbb{Z}^{\eta}$, with $\eta \in \{1, 2\}$, depending on the method):

$$z(t) = \sum_{\mathbf{u}} \langle z, f_{\mathbf{u}} \rangle f_{\mathbf{u}}(t).$$

Decomposition methods

1. **Fourier transform**:
   - basis functions ($\mathbf{u} = \omega \in \mathbb{N}$): $t \mapsto \exp(2i\pi\omega t)$,
   - Fourier coefficient: $\langle z, f_{\mathbf{u}} \rangle = \int_{\mathbb{R}} z(t) \exp(-2i\pi\omega t) dt$ (to be discretized).
2. **Windowed Fourier transform**: basis functions ($\mathbf{u} = (\omega, k) \in \mathbb{N} \times \mathbb{Z}$): $t \mapsto \exp(2i\pi\omega t) \mathbb{1}_{t \in [(k-1)\delta, (k+1)\delta]}$.
3. **Wavelet transform**:
   - basis functions ($\mathbf{u} = (j, k) \in \mathbb{Z}^2$): $\psi_{j,k} : t \mapsto 2^{j/2} \Psi(2^j t - k)$, where j and k are the resolution and translation parameters, $\rightsquigarrow$ Why $2^{j/2}$?
   - conditions on the *mother wavelet* Ψ: $\begin{cases} \int_{\mathbb{R}} \Psi(t) dt = 0 \\ \int_{\mathbb{R}} |\Psi(t)|^2 dt = 1. \end{cases}$
   - wavelet coefficient: $\langle z, f_{\mathbf{u}} \rangle = \int_{\mathbb{R}} z(t) \psi_{j,k}(t) dt$ (to be discretized).

Multiresolution analysis

Detail vs approximation

- **Detail** for a given resolution j: $D_j : t \in \mathbb{R} \mapsto \sum_{k\in\mathbb{Z}} \langle z, \psi_{j,k}\rangle \psi_{j,k}(t)$.
- Summing all the details leads to the signal: $z(t) = \sum_{j\in\mathbb{Z}} D_j(t)$.
- A partial sum of details is an **approximation**:

$$z(t) = \sum_{j\geq j_0} D_j(t) + \sum_{k\in\mathbb{Z}} \langle z, \phi_{j_0,k}\rangle \phi_{j_0,k}(t),$$

where the approximation is obtained by projecting in a functional space derived from a father wavelet (aka scaling function, unique for a given mother wavelet):

$\phi_{j,k} : t \mapsto 2^{j/2}\Phi(2^j t - k)$, such that $\boxed{\int_{\mathbb{R}} \Phi(t)dt = 1}$.

This idea defines **multiresolution analysis**:

- V_j is the set of possible approximations at resolution j: $(\phi_{j,k})_{k\in\mathbb{Z}}$ is a basis for it. We note that $V_j \subset V_{j+1}$.
- $(\psi_{j,k})_{k\in\mathbb{Z}}$ is a basis of W_j defined by the direct orthogonal sum (any element of V_{j+1} is written as the unique sum of two orthogonal elements of V_j and W_j):

$$V_{j+1} = V_j \oplus W_j.$$

Multiresolution correlation

1. We calculate the scale coefficients $c^1_{j,k} = \langle z^1, \phi_{j,k} \rangle$ and $c^2_{j,k} = \langle z^2, \phi_{j,k} \rangle$ for several adjacent discrete scales $j \in J$ for two time series: $(c^1_{j,k})_{j \in J, k \in [0,T]}$ and $(c^2_{j,k})_{j \in J, k \in [0,T]}$
2. We calculate the covariance of the approximations at a given resolution j,

$$\begin{cases} A^1_j(t) = \sum_{k_1=1}^T c^1_{j,k_1} \phi_{j,k_1}(t) \\ A^2_j(t) = \sum_{k_1=1}^T c^2_{j,k_1} \phi_{j,k_1}(t), \end{cases}$$

which is equivalent to the covariance of the scale coefficients for the same resolution:

$$\begin{aligned} \mathrm{Cov}^{1,2}_j &= \frac{1}{T} \int_{[1,T]} \left(A^1_j(t) - \frac{1}{T} \int_{[1,T]} A^1_j(s) ds \right) \left(A^2_j(t) - \frac{1}{T} \int_{[1,T]} A^2_j(s) ds \right) dt \\ &= \frac{1}{T} \sum_{k=1}^T \left(c^1_{j,k} - \frac{1}{T} \sum_{l=1}^T c^1_{j,l} \right) \left(c^2_{j,k} - \frac{1}{T} \sum_{l=1}^T c^2_{j,l} \right). \end{aligned}$$

$\rightsquigarrow$ Why can we simplify the formula this way?

3. Multiresolution correlation:

$$\mathrm{Corr}^{1,2}_j = \frac{\mathrm{Cov}^{1,2}_j}{\sqrt{\mathrm{Cov}^{1,1}_j \mathrm{Cov}^{2,2}_j}}.$$

Practical application with Haar wavelets

The **Haar wavelet** is the most simple in the Daubechies family (family of orthogonal wavelets with compact support), with father wavelet

$$\Phi(t) = \mathbb{1}_{t \in [0,1)}$$

and mother wavelet

$$\Psi(t) = \begin{cases} 1 & \text{if } 0 \leq t < 1/2 \\ -1 & \text{if } 1/2 \leq t < 1 \\ 0 & \text{otherwise.} \end{cases}$$

In practice:

- calculate price returns at the finest scale (equal to the time unit),
- scaling coefficient at resolution $j \leq 0$ is the sum of 2^{-j} consecutive returns (that is the return for an interval of duration 2^{-j}), multiplied by $2^{j/2}$,
- distinct coefficients are based on non-overlapping returns.

$\rightsquigarrow$ Python exercise, Question 3.

Application 1: Epps effect

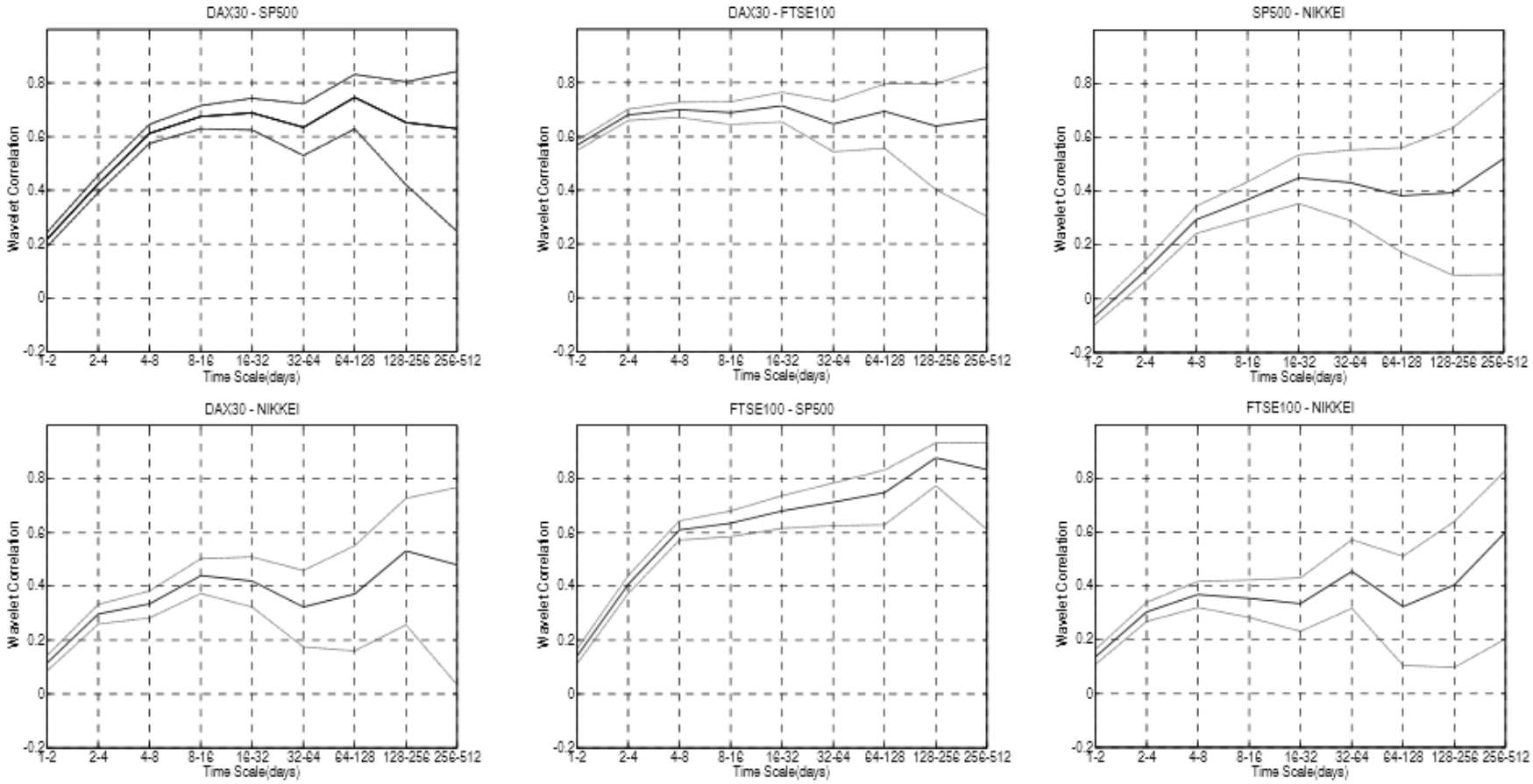

Figure: Wavelet correl, May 1988-January 2007, with 95% confidence intervals. Source: Mikko Ranta.

Application 2: Diversification ranking

Table 3. Correlation diversification ranking on four different time scales. Time scales used are a day(scale 1, 1-2 days), a week(scale 3, 4-8 days), a month(scale 5, 16-32 days) and a year(scale 9, 256-512 days). Ranking is formed on the basis of portfolio diversification efficiency. Correlations are in the parentheses. 5% significance level is marked with *.

Rank	Day	Week	Month	Year
1	SP500 - NIKKEI (-0,071*)	SP500 - NIKKEI (0,294*)	FTSE100 - NIKKEI (0,334*)	DAX30 - NIKKEI (0,480*)
2	DAX30 - NIKKEI (0,114*)	DAX30 - NIKKEI (0,334*)	DAX30 - NIKKEI (0,420*)	SP500 - NIKKEI (0,521*)
3	FTSE100 - NIKKEI (0,135*)	FTSE100 - NIKKEI (0,369*)	SP500 - NIKKEI (0,449*)	FTSE100 - NIKKEI (0,602*)
4	FTSE100 - SP500 (0,139*)	FTSE100 - SP500 (0,609*)	FTSE100 - SP500 (0,681*)	DAX30 - SP500 (0,630*)
5	DAX30 - SP500 (0,218*)	DAX30 - SP500 (0,612*)	DAX30 - SP500 (0,689*)	DAX30 - FTSE100 (0,665*)
6	DAX30 - FTSE100 (0,567*)	DAX30 - FTSE100 (0,701*)	DAX30 - FTSE100 (0,714*)	FTSE100 - SP500 (0,834*)

Figure: Ideas for strategy based on the time horizon? Source: Mikko Ranta.

Application 3: Mulitresolution lead-lag analysis (1/2)

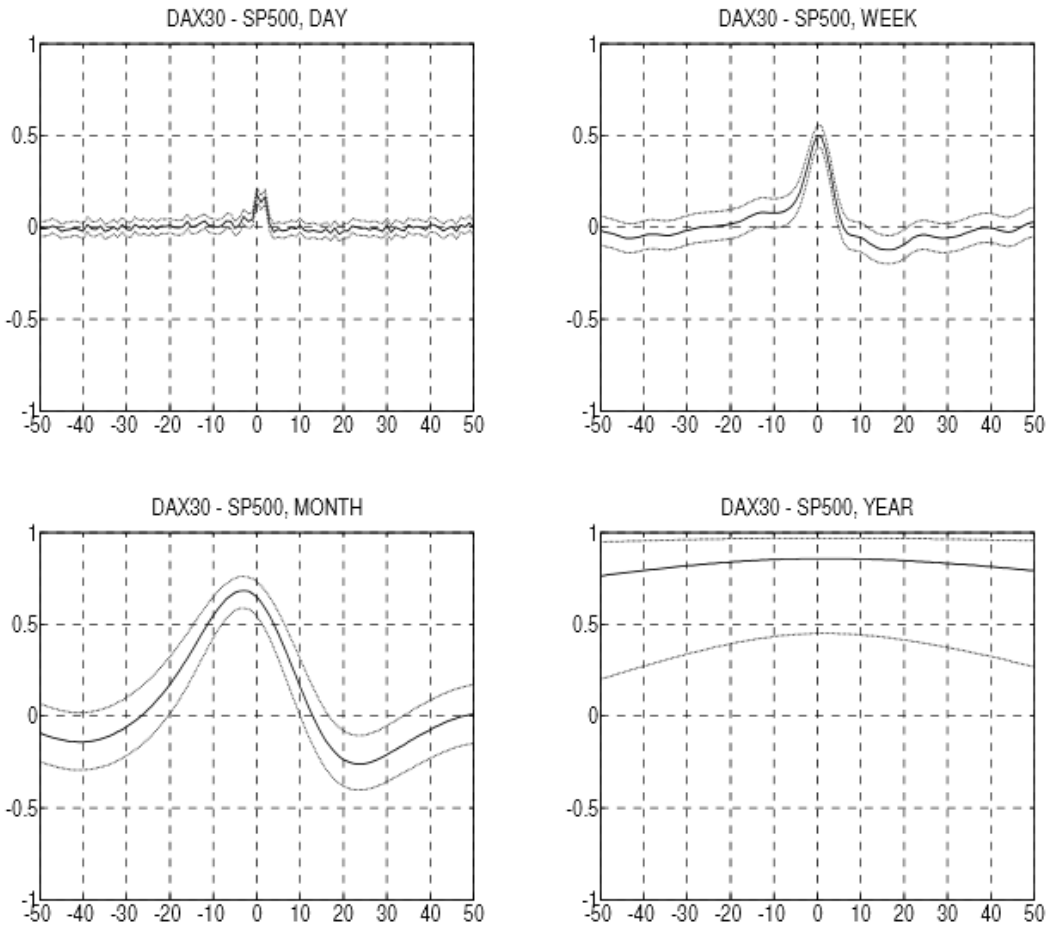

Figure: Day lag on the abscissa, correlation at several scales on the ordinate. Skew on the left: leading DAX30. Skew on the right: leading SP500. On the daily scale, SP500 is the leader, but on the monthly scale it is the DAX30. Source: Mikko Ranta.

Application 3: Mulitresolution lead-lag analysis (2/2)

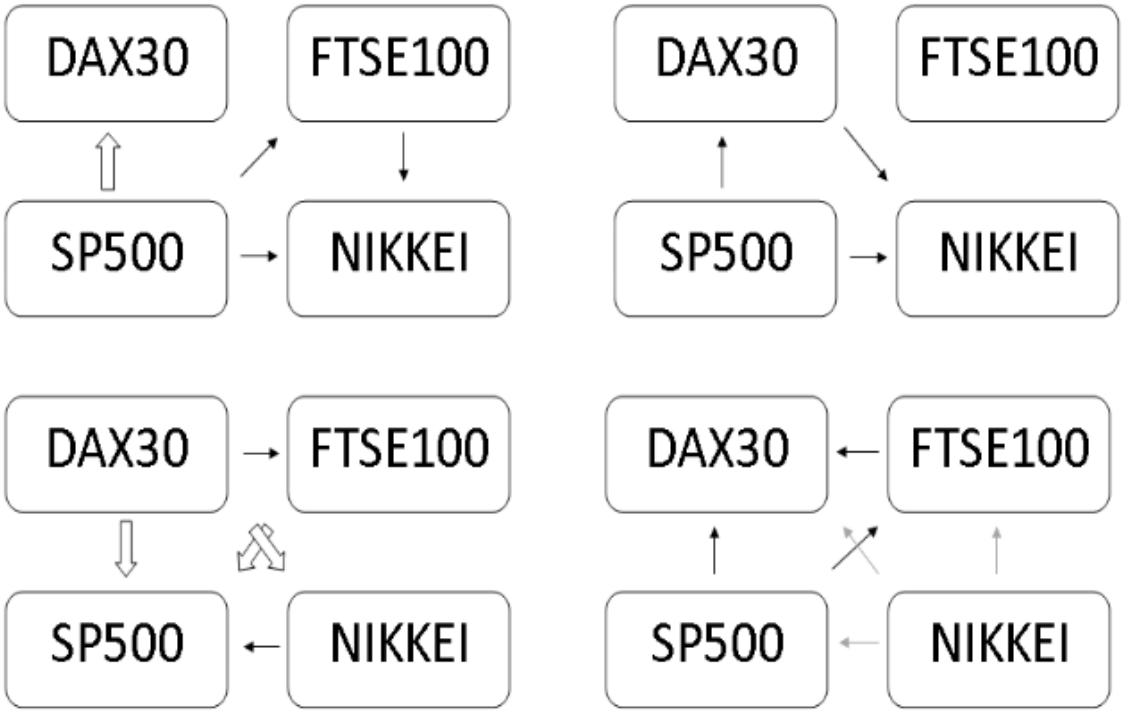

Figure 5. Volatility spillover flow charts for four different time scales. Flows have been visually estimated using the wavelet cross-correlation functions. From the upper-left corner the time scales are a day(1-2 days), a week(4-8 days), a month(16-32 days) and a year(256-512 days). Black arrows were statistically significant at a 5% level, while grey arrows were not. Big arrows describe a very strong volatility spillover.

Figure: Lead-lag effect at multiple scales. Ideas for strategies? Source: Mikko Ranta.

End of Part 2.